POLARIS

DRIVE TRAIN, GEAR SELECTOR - Z26SPD92AN/AH/BN/BH (C750503)

2026 RZR - RZR PRO S ULTIMATE (R01) - Z26SPD92AN/AH/BN/BH

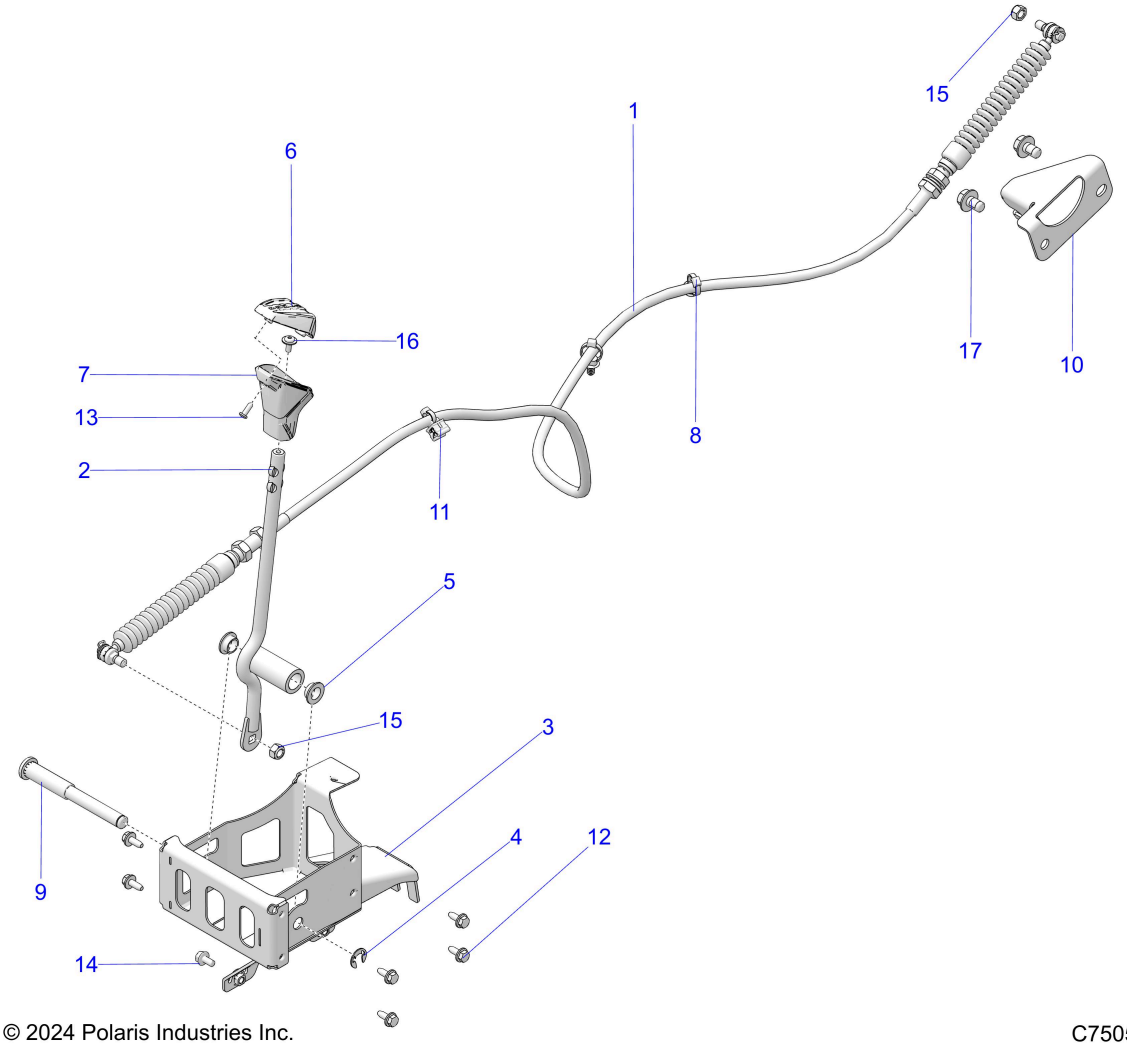

© 2024 Polaris Industries Inc. C750503

Reference #	Part#	Description	Quantity
1	7083012	CABLE-SHIFT	1
2	1544296	WELD-SHIFT LEVER	1
3	1028584-329	WELD-MOUNT,SHIFT LEVER,ECOAT	1
4	7710901	RING-RETAINING, "E",EXT., .500	1
5	5439274	BUSHING-PEDAL PIVOT	2
6	5458924	COVER-SHIFT	1
7	5459024	KNOB-GEAR SELECTOR SHIFT	1
8	7081496	CLIP FIR-TREE,DIA6-33MM	2
9	5143245	PIN-PIVOT,SHOULDER	1
10	5260995	BRACKET, SHIFT CABLE	1
11	7082073	STRAP-CABLE TIEW/EDGECLIP3-6MM	1
12	7518513	BOLT,M6X1.0X15,HXFLG,TAP/T-OD	6
13	7519091	SCR-#10X1/2-HI/LO-PN-T25, TRX-M	1
14	7521331-12	SCR-HXFL-M6X1.0X12 10.9ZFB	2
15	7547144	NUT-NYLOCK M8X1.25-Y	2
16	7512084	SCR-10-24X1/2, PHTXTRIRD, SEMS-Y	1
17	7519374	SCR-HXFL-M10X1.25X16 8.8 ZOD N	2

Copyright 1996-2026 Polaris Industries U.S.A All rights reserved.